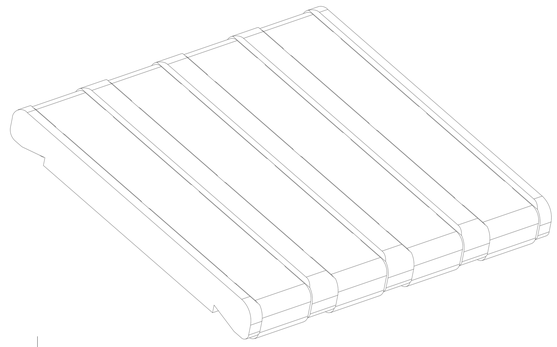

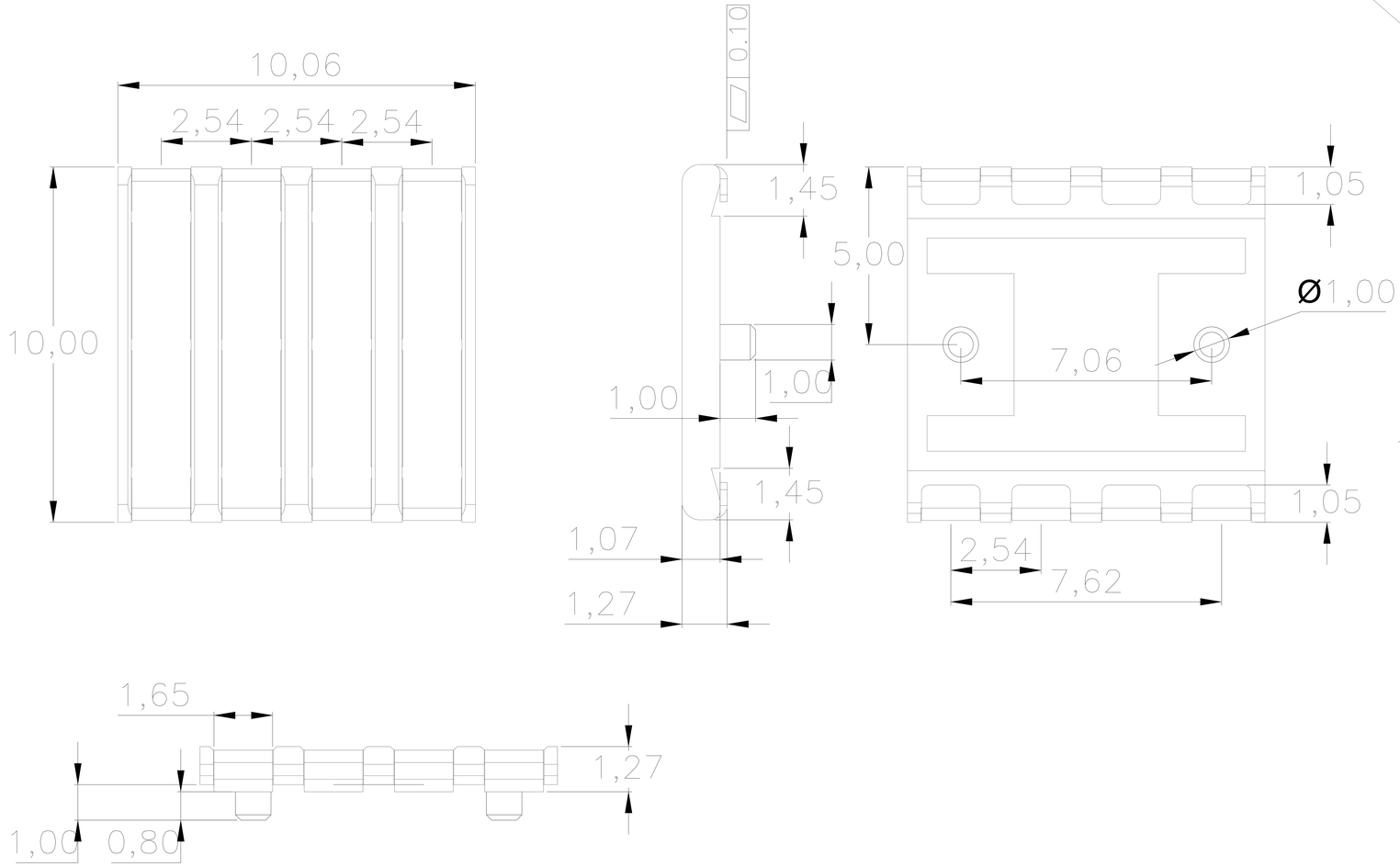

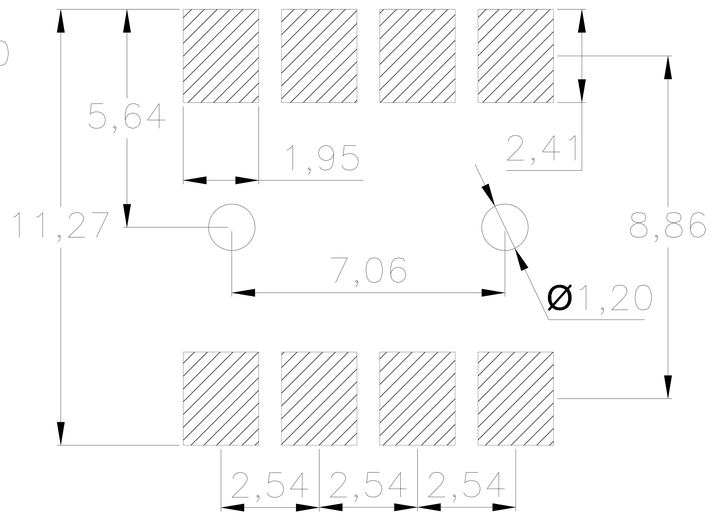

RECOMMENDED PCB LAYOUT

TOP VIEW(.XX±0.05)

NO.	PARTS	MATERIAL	QTY.	FINISHING
2	HOUSING	PA9T	1	BLACK
1	CONTACT TERMINAL	BRASS	3	Au PLATED

DISONG ELECTRONIC CO.,LTD.

COPYRIGHT RESERVED,PLEASE DO NOT COPY.

PART NAME	CONNECTOR	DRAWING	G.B.Wu	DWG.No.	DS-BC-099
PART NO.	BC-0-402	CHECK	Q.L..Dai	REV.	A0
UNIT : mm	TOLERANCE OTHERWISE: UP TO 5 ±0.2; ABOVE 5 30 ±0.3; ABOVE 30 ±0.5; ANGLE ±3°	ANGLE 0°±3°	APPROVAL	DATE	28-08-2017
			SCALE 2:1	PAGE	1 OF 1