CAD FILE:

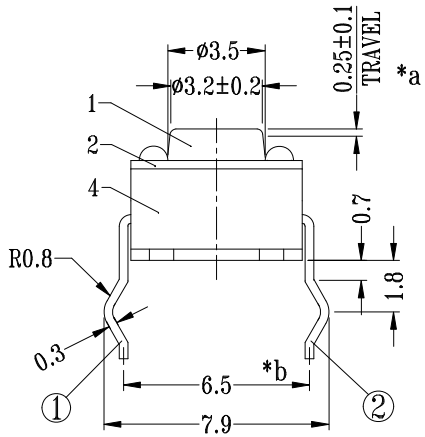

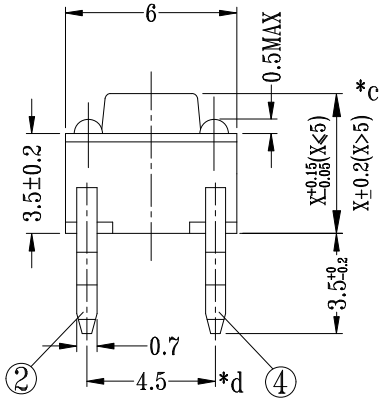

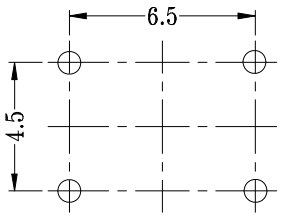

P.C.B LAYOUT

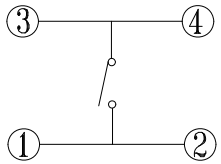

SCHEMATIC

NO.	PARTS	MATERIALS	Q'TY	FINISH
8				
7				
6				
5				
4	CASE	NYLON/NYLON+94V0	1	BLACK/Ag PLATED
3	CONTACT	SEE CONTACT CHART	1	Ag CLAD
2	COVER	0.3 mm ZINC PLATE/PET	1	SEE COVER CHART
1	KNOB	POM/NYLON/NYLON+94V0	1	SEE KNOB CHART

TOLERANCE UNLESS SPECIFIED
WITHIN : 1.5±0.1mm
OVER : 1.5±0.2mm

DONGGUAN DISONG ELECTRONIC CO., LTD.

ISSUE	DATE	DESCRIPTIONS OF REVISION	APPD.

TITLE : TACT SWITCH
UNIT : mm
DRWG NO.: TC-003
MODEL: TC-003
SCALE: 5:1

DWN.	ZHOUYU	2004-9-12
CHK'D	FANGYING	2004-9-12
APPD.	KANGXINAN	2004-9-12

ALL MATERIALS MUST BE COMPLIANT TO ROHS