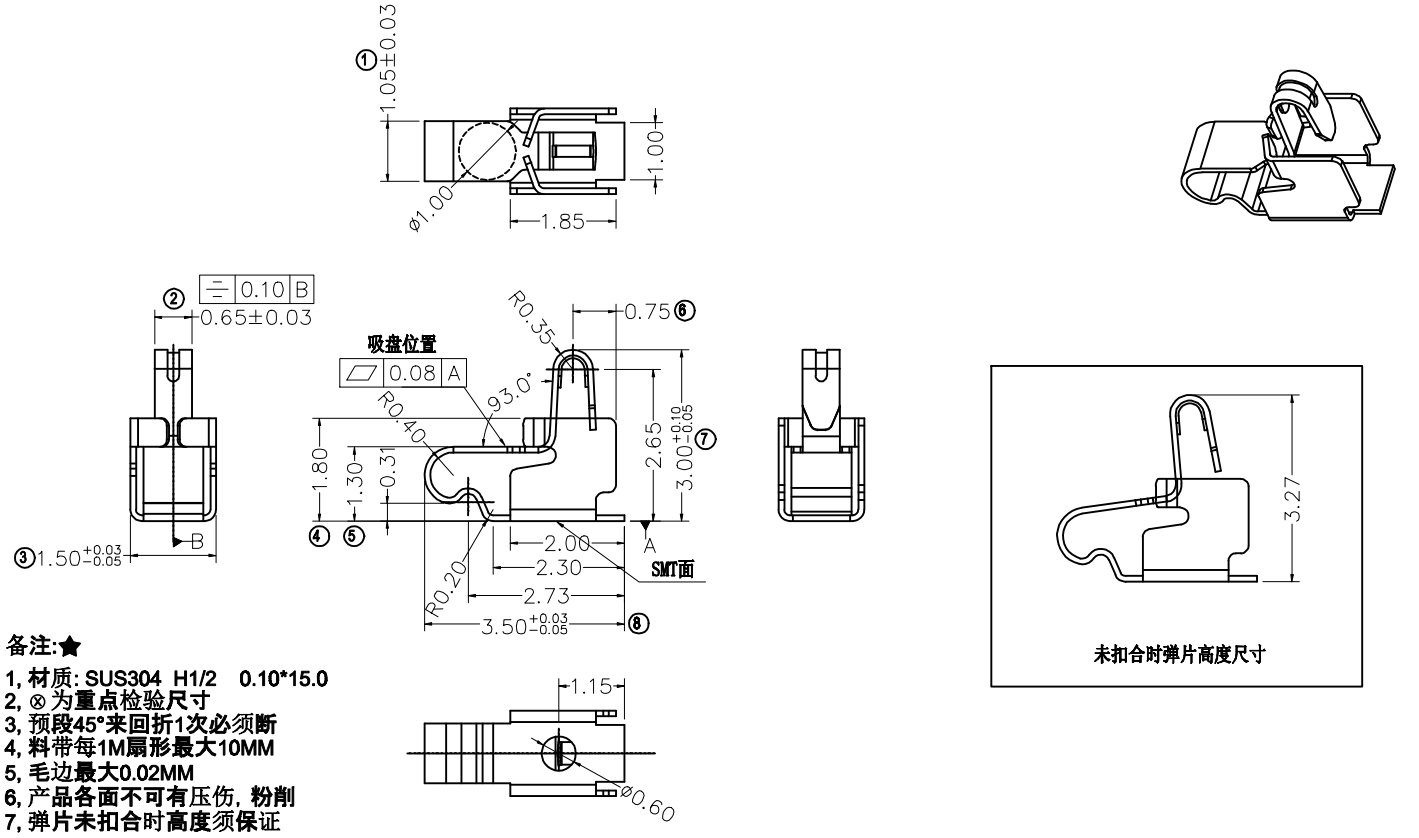

未扣合时弹片高度尺寸

备注:★

1, 材质: SUS304 H1/2 0.10*15.0
2, ⊗ 为重点检验尺寸
3, 预段45°来回折1次必须断
4, 料带每1M扇形最大10MM
5, 毛边最大0.02MM
6, 产品各面不可有压伤, 粉削
7, 弹片未扣合时高度须保证

DISONG ELECTRONIC CO., LTD.	PART NAME	CONNECTOR		DRAWING	W.M.Zhang	DWG.No.	DS-AS-002
	PART NO.	AS-002		CHECK	Q.L.Dai	REV.	A0
	UNIT : mm	TOLERANCE OTHERWISE	UNLESS OTHERWISE SPECIFIED, TOLERANCE: X ±0.25, X.X ±0.10, X.XX ±0.05, ANGULAR ±2°	Material SUS304	APPROVAL	Y.X.Wang	DATE 06-09-2006
					SCALE	2:1	PAGE 1 OF 1

COPYRIGHT RESERVED,PLEASE DO NOT COPY.