SYMBOL	REVISION	APPROVAL	DATE

RoHS Compliant

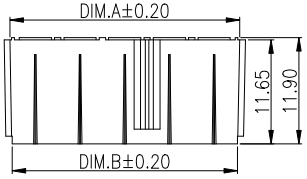

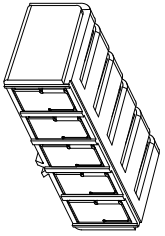

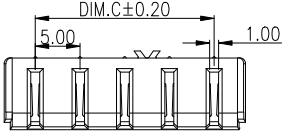

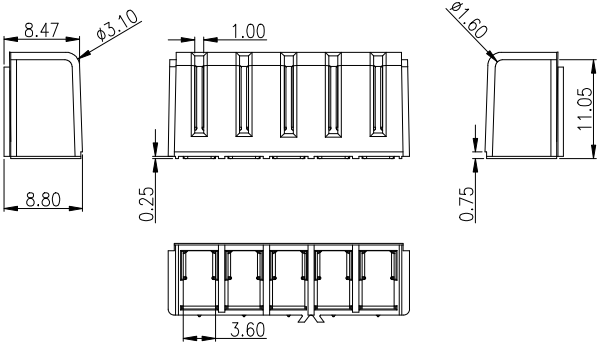

备注:

1.产品规格:

1-1.额定电压:30V

1-2.耐电压:1000V AC MIN.

1-3.接触阻抗:30mΩ MAX.INITIAL;40mΩ MAX AFTER 3000 CYCLES

1-4.绝缘电阻:1000MΩ MIN

1-5.工作温度:-25°C TO +80°C

2.材质:

2.1胶芯:PA9T UL94V-0/LCP BLACK

2.2端子:合金铜,镍底,GOLD

3.所用材质须合符RoHS要求

PART NUMBER	PIN	Dim.A	Dim.B	Dim.C
母座DS-C01F-A-2P-SMT	02pin	10.70	10.20	5.00
母座DS-C01F-A-3P-SMT	03pin	15.70	15.20	10.00
母座DS-C01F-A-4P-SMT	04pin	20.70	20.20	15.00
母座DS-C01F-A-5P-SMT	05pin	25.70	25.20	20.00

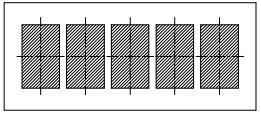

RECOMMNDED P.C.BOARD LAYOUT

东莞市迪松电子科技有限公司

COPYRIGHT RESERVED,PLEASE DO NOT COPY.

PART NAME	CONNECTOR	DRAWING	M.M.Zhang	DWG.No.	DS-058
PART NO.	母座DS-C01F-A-2P/3P/4P/5P-SMT	CHECK	G.C.Chen	REV.	A1
UNIT : mm	TOLERANCE OTHERWISE: UP TO 5 ±0.2; ABOVE 5 ~30 ±0.3; ABOVE 30 ±0.5; ANGLE ±3°	ANGLE 0°±3°	APPROVAL	DATE	01-07-2016
			SCALE 2:1	PAGE	1 OF 1